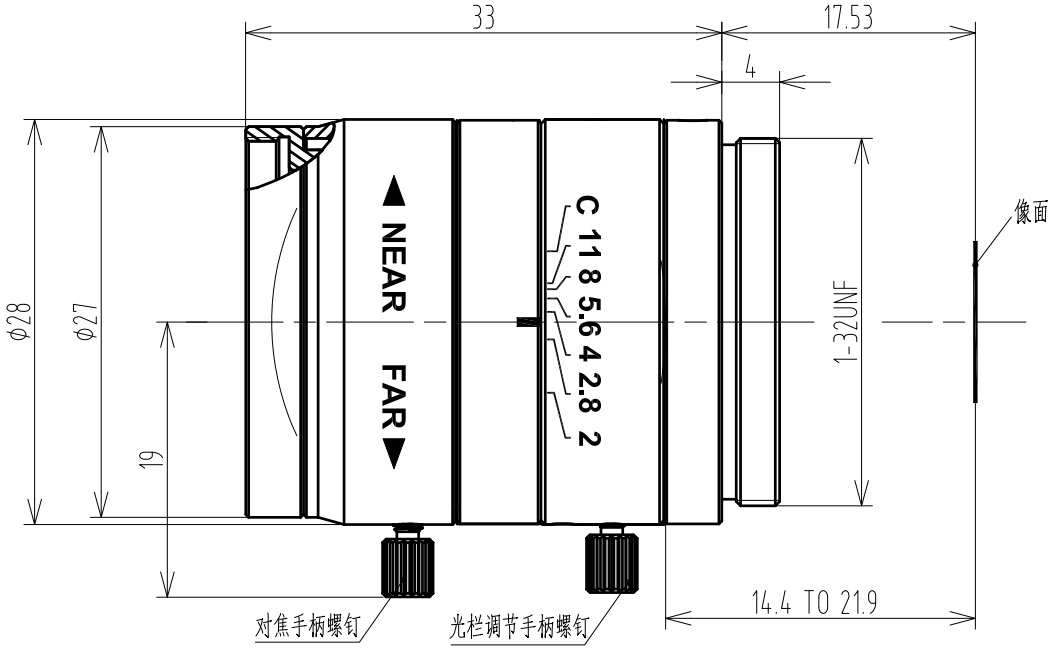

1/1.8" F2.0 C Mount					Working distance	Optical Magnification	1/1.8" Field of View(mm)	
Focal Length		f=35mm			mm		H	V
F/NO		F=1:2.0~C			1000	0.036X	201.6	151.2
Image Size		1/1.8"(7.2×5.32mm)	1/2.5"(5.76×4.32mm)	1/3"(4.8×3.6mm)	950	0.037X	191.3	143.5
Angle FOV	H	8.8°	8.84°	7.4°	900	0.040X	181.1	135.8
	V	7.0°	6.7°	5.5°	850	0.042X	170.1	127.6
	D	12.24°	11.1°	9.3°	800	0.045X	160.5	120.4
Object Dimension at WD.300mm	H	57.9mm	46.5mm	38.7mm	750	0.048X	150.3	112.7
	V	43.4mm	34.9mm	29.0mm	700	0.051X	140.0	105.0
	D	72.4mm	58.1mm	48.4mm	650	0.055X	129.8	97.3
Distortion (TV)		<0.1%			600	0.060X	119.5	89.6
Focus distance(min)		0.2m			550	0.066X	109.2	81.9
Flange back		17.526mm in air			500	0.073X	99.0	74.2
Back focus		19mm in air			450	0.081X	88.7	66.5
Filter screw size		M25.5×P0.5			400	0.092X	78.4	58.8
Front/Rear Effective Dia		Front Φ15.7mm Rear Φ8.5mm			350	0.105X	68.2	51.1
Mount		C-Mount			300	0.124X	57.9	43.4
Temperature Range		-10~+50°C			250	0.151X	47.6	35.7
Storage Temperature Range		-20~+60°C			200	0.193X	37.3	28.0

					TOLERANCE: . LINEARITY TOLERANCES ±0.05 . ANGULAR TOLERANCES ARE±30' . DRAFT ANGLES AREA±0.5°/SIDE			三角法	材 料(环 保)	单 位	比 例
									---	mm	2:1
					设 计	朱周德	2016-05-16	名称	RZ3501C5规格图		页 码
					校 对						1/1
1	1		朱周德	2016,06,08	审 核			代号			版 本
标记	处数	更改文件号	担当	变更日期	批 准						V1

致瑞图像 ZHI RUI VISION